Hook-up diagram Industrial style, Optional bus and IO configurations

The label shown is for illustration purposes only and may vary on actual products.

Pin 1&6: # # - Pin 5: # # #

Controller mode	Code
Controller disabled (meter only)	0
Analog setpoint	A
Digital setpoint	D

Integrated Comm. Mode	Code
RS232 – ProPar (default)	A
RS485 – FLOW-BUS	B
RS485 – Modbus RTU	C
RS485 – Modbus ASCII	D

Check table below for Hook-up diagrams

Code	Type	Code	Range	Code	Linked parameter
0	Disabled	0	0 Vdc	0	-
A	Voltage output	0	0-5 Vdc	A	Alarm
		1	0-10 Vdc	B	Batch counter
		9	Custom	C	Control mode
B	Current output	0	0-20 mAdc	D	Density
		1	4-20 mAdc	E	Measure
		2	3.8-20.8 mAdc	F	Frequency
		9	Custom	I	IO switch status
C	Digital output	0	Remote parameter	P	Pressure
		1	Min alarm	S	Setpoint
		2	Max alarm	T	Temperature
		3	Min/max alarm	V	Controller output
		4	Counter limit reached	Z	Custom
		5	Enabled by:		
		9	Custom		
D	Frequency output	9	Custom		
E	PWM output	9	Custom		
F	Pulse output	9	Custom		
G	Voltage input	0	0-5 Vdc	C	Control mode
		1	0-10 Vdc	E	Measure (external sensor)
		9	Custom	I	IO switch status
H	Current input	0	0-20 mAdc	N	Calibration mode
		1	4-20 mAdc	R	Reset
		9	Custom	S	Setpoint
I	Digital input	1	Counter reset	V	Actuator (Valve)
		2	Alarm reset	Z	Custom
		3	Close Valve		
		4	Counter reset/disable		
		5	Auto Zero		
		8	Purge Valve		
		9	Custom		

Preset Table

Type	Range	Par	Configurable input/output (pin 5)
0	0	0	Disabled, 0 Vdc (default)
A	1	V	0-10 Vdc output, controller
B	1	V	4-20 mAdc output, controller
B	2	V	3.8-20.8 mAdc output (TEIP11/Badger), controller
C	3	A	Digital output, min/max alarm
C	4	A	Digital output, counter limit reached
C	5	S	Digital output, enabled by setpoint (for shut-off)
C	0	I	Digital output, high/low switch via remote parameter
D	9	E	Digital frequency output, measure
F	9	B	Digital pulse output, batch counter
I	3	C	Digital input, controller mode valve close
I	8	C	Digital input, controller mode valve purge
I	1	R	Digital input, reset counter
I	2	R	Digital input, reset alarm

Other settings on request.

Check next page for Hook-up diagrams

PIN 1&6, RS232/RS485 HOOK-UP DIAGRAMS

PIN 1&6 BUS OPTIONS

Pin 1&6: # # - Pin 5: # # #

A	RS232 – ProPar (default)
B	RS485 – FLOW-BUS
C	RS485 – Modbus RTU
D	RS485 – Modbus ASCII

0	Controller disabled (meter only)
A	Analog setpoint mode
D	Digital setpoint mode

Note:
When the instrument is configured for analog sepoint mode it is not possible to give a setpoint via FLOW-BUS or Modbus input on the 8DIN connector.
To configure the instrument for digital operation, change parameter 'control mode'. See doc.nr. 9.17.023 for more details.

PIN CONNECTIONS

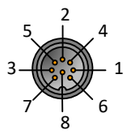

1	**TX-RS232/BUS**
2	Analog output
3	Analog input
4	**0V power**
5	Custom
6	**RX-RS232/BUS**
7	**+Us**
8	0V sense
	Shield

Instrument signals

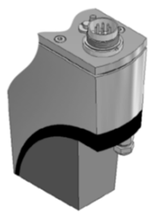

8DIN Connector chassis part male

When connecting the system to other devices, be sure that the integrity of the shielding is not affected. Do not use unshielded wire terminals.

A RS232 – ProPar

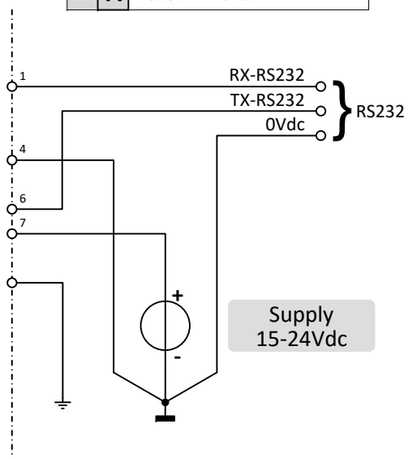

B RS485 – FLOW-BUS

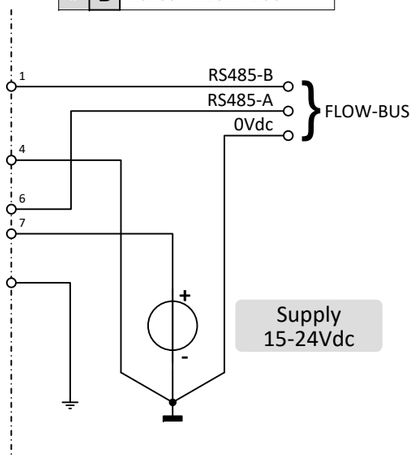

C RS485 – Modbus RTU / D RS485 – Modbus ASCII

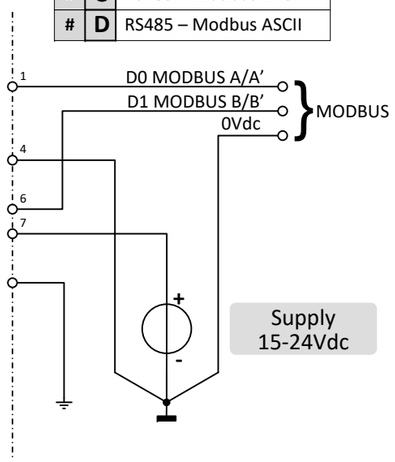

Hook-up diagram Industrial style, Optional bus and IO configurations

PIN 5, IO HOOK-UP DIAGRAMS

PIN 5 IO OPTIONS

Pin 1&6 | Pin 5

#	#	-	#	#	#

0	0	0	Disabled, 0 Vdc (default)
A	#	#	Vdc analog output
B	#	#	mAdc analog output
C	#	#	Digital output
D	#	#	Digital frequency output
E	#	#	Digital PWM output
F	#	#	Digital pulse output
G	#	#	Vdc analog input
H	#	#	mAdc analog input
I	#	#	Digital input

POWER SUPPLY WARNING

** Use only 8-pin DIN or FLOW-BUS/Modbus/DeviceNet connector to power the device. Wrong powering could damage the device. Please refer the corresponding manual for the right power connection!

PIN CONNECTIONS

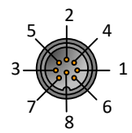

1	**TX-RS232/BUS**
2	Analog output
3	Analog input
4	**0V power**
5	Custom
6	**RX-RS232/BUS**
7	**+Us**
8	0V sense
	Shield

Instrument signals

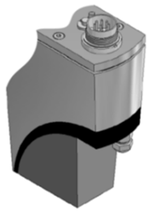

8DIN Connector chassis part male

When connecting the system to other devices, be sure that the integrity of the shielding is not affected. Do not use unshielded wire terminals.

A	0	#	0-5 Vdc analog output
	1	#	0-10 Vdc analog output
	9	#	custom Vdc analog output

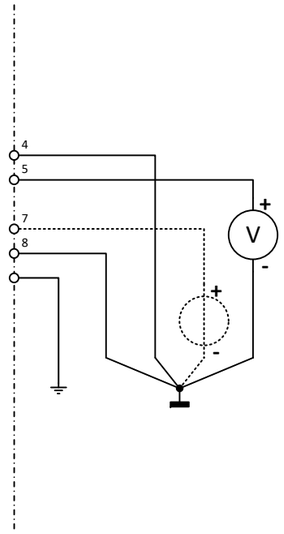

Meter (Vdc) (R_{load}>2kΩ)

**Supply (Vdc) 15-24Vdc

Note:
0Vdc power (pin 4) and 0Vdc sense (pin 8) should be seperately connected to the 0Vdc terminal at the power supply

B	0	#	0-20 mAdc analog output
	1	#	4-20 mAdc analog output
	2	#	3.8-20.8 mAdc analog output
	9	#	custom mAdc analog output

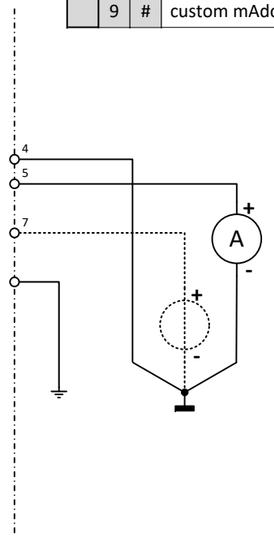

Meter (mAdc) (R_{load}<375Ω)

**Supply (Vdc) 15-24Vdc

Note:
In analog mode with 'mAdc' signals 0Vdc sense (pin 8) does not need to be connected. The instrument's operation will not be effected in case 0Vdc sense is already hooked-up

Internal setup digital output

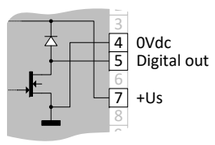

C	#	#	Digital output
D	#	#	Digital frequency output
E	#	#	Digital PWM output
F	#	#	Digital pulse output

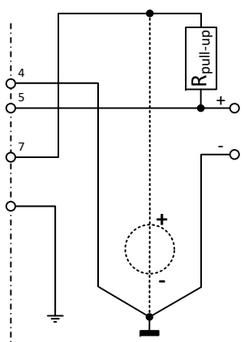

*$R_{pull-up}$ = 5kΩ-10kΩ

Pulse output Active = 0Vdc (low)

**Supply (Vdc) 15-24Vdc

Pulse Output

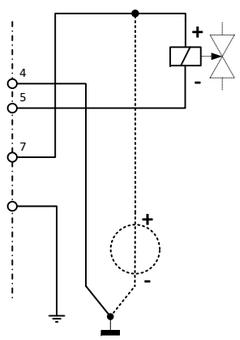

Valve (I_{max}=265mA)

**Supply (Vdc) 15-24Vdc

Shut-off Valve

* Use Rpull-up (between 5kΩ and 10 kΩ) to create 15-24Vdc at pin 5

Note:
For 15Vdc supply the minimal Load is 60 Ω, for 24Vdc supply the minimal load is 90 Ω.

Note:
Digital output is not available for instruments with Class I Div 2 certificate.

G	0	#	0-5 Vdc analog input
	1	#	0-10 Vdc analog input
	9	#	custom Vdc analog input

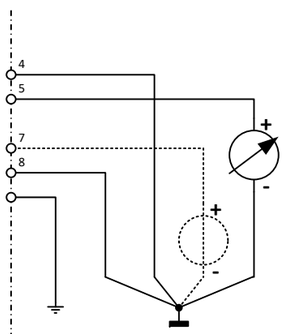

Source (Vdc)

**Supply (Vdc) 15-24Vdc

Note:
0Vdc power (pin 4) and 0Vdc sense (pin 8) should be seperatly connected to the 0V terminal at the power supply. (Impedance = 250kΩ)

H	0	#	0-20 mAdc analog input
	1	#	4-20 mAdc analog input
	9	#	custom mAdc analog input

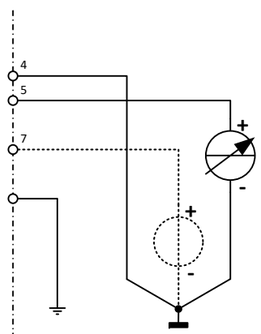

Source (mAdc)

**Supply (Vdc) 15-24Vdc

Note:
In analog mode with 'mAdc' signals 0Vdc sense (pin 8) does not need to be connected. The instrument's operation will not be effected in case 0Vdc sense is already hooked-up. (Impedance = 250Ω)

I	#	#	Digital input

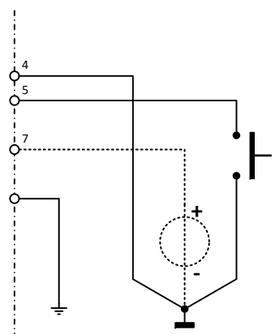

U_{low} < 0.2Vdc
U_{high} > 1.4Vdc

**Supply (Vdc) 15-24Vdc